EzDam®

FLOOD BARRIERS

PS DOORS

Installation Instructions and Operators Manual

MODEL

- EzDam® EZD-600-42
- EzDam® EZD-600-52

TABLE OF CONTENTS

	PAGE
Terms and Conditions ……..	1
Warranty ……..	2
General Product Information ……..	4
EzDam Installation Instructions ……..	7
EzDam Parts & Reorder List ……..	9
Inspection & Maintenance Log ……..	10

PS Flood Barriers™

Solutions That Hold Water

To Contact PS DOORS:

Mail
PS DOORS
PS Flood Barriers
1150 S. 48th Street
Grand Forks, ND 58201

Local Phone
701.746.4519
Toll Free Phone
877.446.1519

Website
psfloodbarriers.com
Email
4psinfo@psdoors.com

Hours of Operation
8 A.M. to 5 P.M.
Monday - Friday

IMPORTANT! **Read entire Installation Instruction and Operations and Maintenance Manual to become familiar with the product.**

NOTICE The effectiveness of the product is directly related to the proper installation & operation of this product. Failure to properly maintain this product ***will*** affect performance.

Compliance and Publication Notice

This manual has been compiled and published covering the latest product descriptions and specifications.

The contents of this manual and the specifications of this product are subject to change without notice.

PS DOORS reserves the right to make changes without notice in the specifications and materials contained herein and shall not be responsible for any damages (including consequential) caused by reliance on the materials presented, including but not limited to typographical and other errors relating to the publication.

Rev. Date 072817

© PS DOORS 2017. All Rights Reserved.

If you need to contact Customer Service

Please complete the following information and retain for future reference:

Serial Number: _____

Purchase Date: _____

PS DOORS Job Number: _____

Project Name: _____

TERMS AND CONDITIONS

EzDam® is intended to be used for the purpose and under the terms and conditions stated by PS DOORS product literature. The information provided about this product is based on tests conducted by PS DOORS under controlled conditions and intended for comparison and/or general information purposes only. Since the conditions of actual use may vary and are beyond PS DOORS' control, PS DOORS cannot guarantee that the same or sufficient results will be obtained under different conditions. In purchasing this product from PS DOORS, you agree to assume all risks related to and/or arise from your ownership, installation, and use of the EzDam and agree to indemnify and hold PS DOORS harmless from any and all claims brought by any person or entity against PS DOORS related to and/or arising from your ownership, installation and/or use of this product. PS DOORS shall not be held liable for any improper or incorrect ownership, installation or use of this product and assumes no responsibility for anyone's ownership, installation or use of this product. In no event shall PS DOORS be liable for any direct, indirect, incidental, special, exemplary or consequential damages (including, but not limited to: procurement or substitute goods or services; loss of use or profits; or business interruption) however caused and on any theory arising in any way out of the use of this product, even if advised of the possibility of such damage. This disclaimer of liability applies to any damages, injury or death, whether based on alleged breach of contract, tortious behavior, negligence or any other cause of action, including and not limited to damages or injuries caused by any failure of performance, error, omission, defect or delay in operation.

INTENDED PURPOSE

The intended purpose of EzDam is to be used as a portable, re-usable barrier by which to minimize water intrusion through doors or other openings. It is PS DOORS' goal to provide this product as a safe and effective means to minimize water intrusion, assuming of course that it is used properly and for its intended purpose. EzDam is not designed to replace any other product that may be used for a similar purpose. Furthermore, when not used properly or for its intended purpose, PS DOORS makes no claim as to the EzDam's safety or effectiveness If there is any question as to the intended and/or proper use of the EzDam, please contact PS DOORS at 877-446-1519.

SAFETY CONSIDERATIONS

Safe use of EzDam is a paramount concern to PS DOORS. Accordingly, PS DOORS recommends that no person attempt to install or utilize the EzDam unless such person is capable of reading and understanding the contents of, and is willing to abide by the EzDam Installation Instructions and Operators Manual as contained herein. Improper or unintended use of this product could result in serious bodily injury or structural damage to a dwelling. If there is any question as to the safety and/or proper use of the EzDam, please contact PS DOORS at 877-446-1519.

Please read and understand the entire Installation Instructions and Operators Manual before using and operating your EzDam product.

© PS DOORS 2017. All Rights Reserved.

LIMITED WARRANTY

PS DOORS warrants this product and components to be free from defects in material and workmanship for a period of one (1) year from date of shipment. If within the term of this warranty, if any EzDam® component is found to be defective upon inspection by an authorized PS DOORS representative, PS DOORS will replace or repair, at PS DOORS' discretion, any part found to be defective. Any field labor charges incurred are the sole responsibility of the customer.

To make a claim under this warranty, contact PS DOORS at the address shown below.

PS DOORS
Attention: Warranty
1150 S. 48th Street
Grand Forks, ND 58201

Toll Free: 877-446-1519
Phone: 701-746-4519
Fax: 701-746-8340
E-mail: 4psinfo@psdoors.com

Unauthorized modification of this product voids the PS DOORS Limited Warranty. Accordingly, you can expect any request for warranty repair to be charged to you, if the product requires service after unauthorized modification. Authorized modifications, received in writing from PS DOORS, as long as the modification is accomplished in strict accordance with PS DOORS' instructions, does not void warranty. To request product modifications contact PS DOORS, 1150 S. 48th Street, Grand Forks, ND 58201, phone 877-446-1519, email: 4psinfo@psdoors.com.

PS DOORS SHALL NOT BE LIABLE FOR ANY CONSEQUENTIAL OR INCIDENTAL DAMAGES.

All other warranty's, express or implied including any warranty of merchantability, are expressly excluded. Some states do not allow the exclusion or limitation of consequential or incidental damages, so the above limitation or exclusion may not apply to you.

WARRANTY DOES NOT APPLY TO ANY DAMAGE OR DETERIORATION CAUSED BY MODIFICATION, ABUSE, APPLIED PAINT FAILURE OR FAILURE TO PROVIDE REASONABLE AND NECESSARY MAINTENANCE.

This warranty gives you specific legal rights, and you may also have other rights, which vary, from state to state.

Exclusions:

Seals and/or Gasketing are considered a "wear-item" and are not covered under this warranty.

PS DOORS

IMPORTANT! ACTION REQUIRED!

In order to Validate your Warranty the following information must be completed and returned to PS DOORS, failure to completely fill out this information, or to return information to PS DOORS may void warranty.

WARRANTY REGISTRATION

Owner Name: _____ Product: _____

Company: _____ Model: _____

Address: _____ Serial Number(s): _____

City: _____ Date Installed: _____

State/Province: _____ Postal Code: _____

Country: _____

Please answer the following questions:

1. *Has the installed product been tested?* ____ *Yes* ____ *No*
2. *Test Witnessed by, Name:* _____ *Date:* _____
3. *Product Initial Inspection by, Name:* _____ *Date:* _____

Warranty Registration must be returned to:

- *Fax: 701-746-8340*
- *Email: 4psinfo@psdoors.com*
- *Mail: PS DOORS*
  1150 S. 48th Street
  Grand Forks, ND 58201

Warranty Registration Information will be used for activation of product warranty only.

© PS DOORS 2017. All Rights Reserved.

Safety Precautions

We use the following icons throughout the Operations & Maintenance Manual.

DANGER Indicates an imminently hazardous situation which, if not avoided, will result in death or serious injury.

WARNING Indicates a potentially hazardous situation which, if not avoided, could result in death or serious injury.

CAUTION Indicates a potentially hazardous situation which, if not avoided, may result in minor or moderated injury.

NOTICE Indicates manufacture's statement of additional information.

IMPORTANT! Indicates a required action.

CRITICAL Indicates a vital component to product performance.

NOTICE ADDITIONAL INFORMATION

1. No additional allowances have been included for hydrodynamic loads, debris impact loads or wave loads, unless specifically detailed in additional documentation provided.
2. All water pressure loads, impact loads, and operating loads are transferred to the building structure. Building structure design, capacity to accept loads from flood barriers, and evaluation of loads to structure is by others, not PS DOORS.
3. PS DOORS recommends that the owner implement an regular maintenance program to inspect the gaskets and barrier panels. This program may require the replacement of gaskets; touch up painting and accounting for of all the latching devices and proper operation.
4. If the water height exceeds the level of any door penetrations or water protective design height, leakage will occur.
5. This product is equipped with compressible seals, which are not dependent on inflation devices.
6. PS DOORS recommends a flood preparedness plan be developed, trained on, and implemented to be activated during times of potential flooding conditions.
7. PS DOORS AND/OR ITS RESPECTIVE SUPPLIERS MAY MAKE IMPROVEMENTS AND/OR CHANGES IN THE PRODUCT(S) OR SERVICE(S) OFFERED AND/OR THE PROGRAM(S) AT ANY TIME WITHOUT NOTICE.

IMPORTANT! **Read entire Operations & Maintenance Manual to become familiar with the product.**

NOTICE This product is a flood protective barrier. The effectiveness of the product is directly related to the proper installation and maintenance of this product. Failure to properly maintain this product ***will*** affect performance.

You Tube **A PS DOORS EzDam Installation Video is available for viewing at: youtube.com/PSDOORSManufacturing**

Notice: This video does not contain all necessary installation procedures and information. It is important that you carefully read this Operation & Maintenance Manual in addition to watching the product installation video.

© PS DOORS 2017. All Rights Reserved.

Owners and Operators Manual

IMPORTANT! **Read entire Operations and Maintenance Manual to become familiar with the product.**

NOTICE This product is a flood protective barrier. The effectiveness of the product is directly related to the proper installation and maintenance of this product. Failure to properly maintain this product ***will*** affect performance.

1. GENERAL INFORMATION

This manual contains information regarding installation, operation and maintenance of custom water resistant flood barrier assemblies.

This product is manufactured to specific guidelines. Unauthorized alteration in any way will result in voiding Factory Warranty, and may cause product to fail.

2. OPERATION GUIDELINES

The following procedures and information are supplied for the operation of the EzDam® Flood Barrier assemblies. Operation in a manner other than intended could result in damage or less than acceptable performance at time of need, for which the manufacturer will not be held responsible.

Always plan for potential leakage and condensation that can occur during flooding conditions.

3. SAFETY PRECAUTIONS

- Ensure opening is clear of all obstructions or debris during operation.
- Do not force panels or components if they do not operate freely.
- If removing panels or hardware for maintenance, consult documents for panel weights, and use appropriate hoisting equipment. Protect all gaskets and hardware. Always consult original factory drawings for all installation dimensions, details, hardware, and specifications.

4. OPERATION UNDER FLOODING CONDITIONS

- **Pre-flooding or Potential Flooding Conditions:**
  - At a minimum, conduct Inspection and Maintenance activities as described in this Operations & Maintenance Manual.
  - Ensure EzDam Flood Barrier is located near the required area for placement when needed, and is placed prior to flood waters reaching the opening.
  - Visually inspect all gaskets for proper positioning and compression. If not in good position and compression, unlatch barrier panel and adjust accordingly.

- **Flooding Conditions Present:**
  - Ensure EzDam Flood Barrier is <u>not</u> opened at any time when flooding conditions are present.
  - If feasible, check EzDam Flood Barrier for leakage or condensation accumulation.

5. INSPECTION AND MAINTENANCE

- **Sills, Frames, and Embedded items:**
  - Inspect items for damage and misalignment. Adjust, repair, or replace as needed, to meet original design tolerances.

NOTICE Unauthorized modification of this product voids the PS DOORS Limited Product Warranty. Accordingly, you can expect any request for warranty repair to be charged to you, if it requires service after modification. Authorized modifications, received in writing from PS DOORS, as long as the modification is accomplished strictly in accordance with PS DOORS' instructions, does not void warranty. To request product modifications contact PS DOORS.

WARNING The flood protective barrier panel MAY BE heavy, verify panel weights and use appropriate lifting procedures and equipment.

CAUTION When placing barrier keep clear of pinch points at the latching mechanism at all times.

© PS DOORS 2017. All Rights Reserved.

- Check all embedded connections, making sure they meet original design standards (*refer to original product drawings).*

- **Fasteners and mechanical connections:**
  - All fasteners must be in place and adjusted to their original design standards. Replace any damaged components (*refer to original product drawings).*

- **Sealants:**
  - Inspect all sealants used on frames and connections to insure their effectiveness. Replace any cracked, loose, or otherwise non-performing sealants.
  - Use only factory approved/supplied products.

- **Gasketing:** Check all gaskets around perimeter of opening.
  - Inspect for gasket and corner splice damage, and for continuous adhesion to the attached surface.
  - Visually inspect all gaskets for proper positioning and compression.
  - Replace or repair if damage or deterioration to gaskets has occurred.
  - Use only factory approved materials *(refer to installation drawings/information).*

- **Latching:**
  - Operate all latching hardware to ensure smooth, uninhibited movement of all mechanical components.
  - Place flood barrier and check latches for proper engagement. If gaskets are not properly positioned and properly compressed, unlatch barrier panel and adjust latching accordingly.

- **Finishes:**
  - Inspect and clean finishes periodically.
  - Touch-up /repair finishes, or refinish as necessary to protect the structural integrity of the product if required.

- **Labels and Placards:**
  - Inspect all labels and placards. Replace any labels and placards which are unreadable.

- **Housekeeping:**
  - Clean sill area and jambs of any debris and keep the area clean throughout barrier opening.

The following information is available upon request:

- Structural Calculations: A copy of PS DOORS' design calculations by a qualified engineer, to verify the flood barrier's ability to withstand the design loading, is available upon request.

- Optional: Registered professional engineer stamped calculations from within the state or territory where the building will be constructed or substantially improved are available at additional cost.

NOTICE PS DOORS recommends all facilities subject to flooding conditions, and employ any type of flood protection have a **Flood Preparedness Plan** in place for activation prior to, or in times of flooding conditions.

IMPORTANT! Consult drawings before replacing fasteners, as most have specific design load requirements.

CRITICAL Gaskets are a critical component of the flood protective barrier performance and must meet minimum compression tolerances in the latched position.

WARNING THIS IS A FLOOD PROTECTION BARRIER. NEVER OPEN DURING ANY FLOODING CONDITIONS AS WATER LEAKAGE WILL OCCUR AND YOU MAY NOT BE ABLE TO RECLOSE THE BARRIER.

© PS DOORS 2017. All Rights Reserved.

Where to use EzDam

EzDam® provides flood protection for well-maintained buildings that are watertight except for their doorways or a similar opening. Needless to say, if the walls of a structure are not watertight, EzDam alone will not provide adequate protection. EzDam is suitable for structures that are constructed of concrete, brick, sealed stone or other watertight materials in good condition. These structures must not have basement windows or sunken doorways. EzDam can work in wooden structures if they are fully encircled by a watertight concrete foundation that rises above the height of your EzDam.

EzDam is not suitable for non-watertight structures such as wood frame houses with foundations lower than the height of your EzDam. EzDam is not appropriate for structures with basement windows or with sunken/slanted outside cellar doorways.

Single EzDam Application

The EzDam barrier is available in two sizes; 42" (protecting openings up to 42" wide) and 52" (protecting openings up to 52" wide). Support mullions are not needed for the single EzDam application. Water protection height for the EzDam single barrier is 36". The EzDam requires 2-1/4" of room on both sides of opening. Positive water pressure only.

Multi-Barrier EzDam

In cases where the width of an opening is larger than 52", multiple EzDam barriers may be installed end to end with a mullion system located where the EzDams meet. In these situations, it is important that the footing beneath EzDam and mullions are a suitable concrete surface. Footing must be smooth, even, level and structurally sound. This will provide an adequate seal for secure anchoring of the Mullions. Mullions are not permanent structures and are only set in place when EzDams are deployed. Plug screws are provided to keep dirt and debris out when mullions are not in use. The EzDam requires 2 1/4" of room on either side of opening. Positive water pressure only.
For multi-barrier installation instructions, please contact PS DOORS at 877.446.1519.

Getting Started

Please make sure you have received all needed parts to install EzDam Flood Barrier (single application):

- EzDam Flood Barrier; including flood barrier, latching, gasket, knobs
- Jambs (2)
- Screws (10)
- Drill Bit
- Caulk with smoothing tool.

You will need the following tools when installing the EzDam:

- **Drill**
- **Pencil**
- **Level**
- **Measuring tape**

© PS DOORS 2017. All Rights Reserved.

Single Barrier Installation Instructions

- **OPENING PROCEDURES**

Step 1. Prepare your surface ensuring a smooth, even, level and structurally sound base.

Step 2. Using a tape measure, measure door/opening width and determine the center point. Mark with a pencil.

Step 3. Determine distance between jamb location and centerline with tape measure. Mark jamb location with pencil.

- **INSTALLING JAMB**

Step 4. Using a level, mark jamb location line on wall (marked in step 3).

Step 5. Place jamb on line and locate and mark anchor holes.

Step 6. Remove jamb and drill anchor holes for jamb.

Step 7. Place bead of caulking on wall side and bottom of jamb and place on wall. (see rendering 7.1)

Step 8. Anchor jamb to wall using screws.

Step 9. After jamb is installed and attached to wall, place bead of caulk around bottom of jamb and smooth to radius with supplied smoothing tool. Remove/clean excess that may interfere with gasket. (see rendering 7.1)

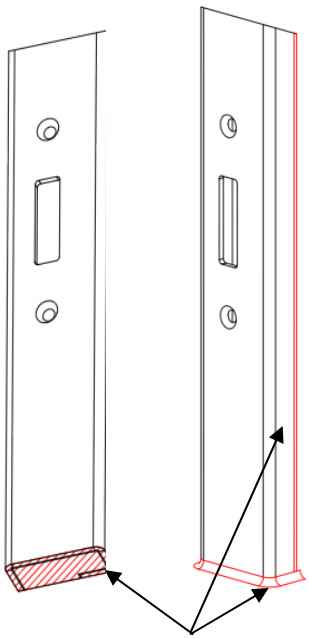

STEP 7 : Caulk red highlighted areas of jambs.

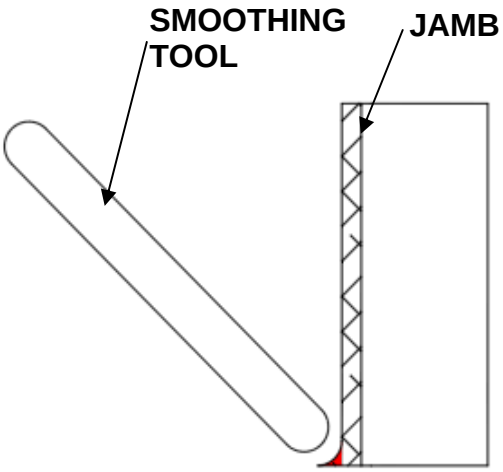

STEP 9: Caulk bottom of jamb and smooth to radius.

© PS DOORS 2017. All Rights Reserved.

Step 10. Repeat steps 4-9 for additional jamb.

- **DEPLOYING EZDAM**

Step 11. Lift and install EzDam, making sure to securely place bottom latching into jamb. Tighten securely using Ez latching system. (see rendering 11.1).

Rendering 11.1

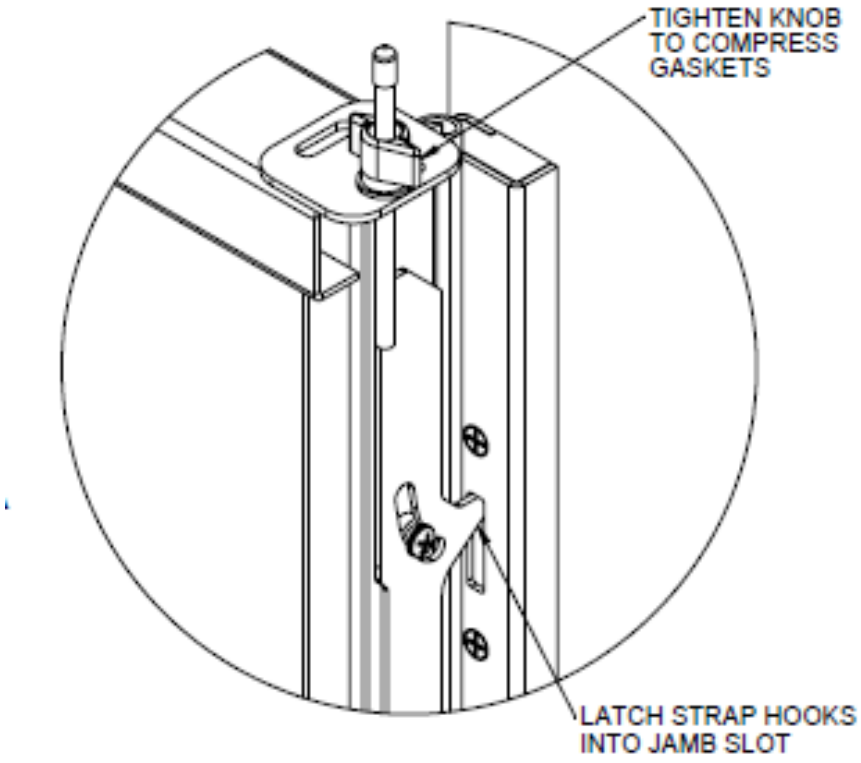

- **STORING EZDAM**

Step 12. Remove EzDam from deployment and store securely on its side. Remove from storage and deploy EzDam when flooding occurs.

© PS DOORS 2017. All Rights Reserved.

EzDam Parts List

	ITEM NO.	PART NO.	DESCRIPTION	QTY.	U/M
	1	511282	EZD; FORMED JAMB	2	EA
	2	511374	ANCHOR; KWIKCON PFH 1/4X2-1/4	8	EA
	3	511457	BIT; DRILL MASONRY 1/4X6"	1	EA
	4	512843	STICK; WOOD 3/8"X1/16"X4-1/2"	1	EA
*	5	511277	EZD; PANEL STRUCTURE 44"	1	EA
	6	511278	EZD; LATCH PLATE	2	EA
	7	509377-511276	EZD JAMB GASKET	2	EA
	8	512642-511276	EZD BOTTOM SILL GASKET	1	EA
	9	511279	EZD; LATCH STRAP	2	EA
	10	512795	SCREW; TRUSSPHMACH10-24X2-1/2SS	4	EA
	11	511271	SPACER;.5OD .192ID X .125	4	EA
	12	511272	SPACER;.3125OD .192ID X .125	4	EA
	13	503900	NUT; NYLOCK #10-24 SS	4	EA
	14	508032	WASHER; FLAT 1/4"SS	2	EA
	15	512301	KNOB; FOUR-ARM NYLON 1/4"-20	2	EA
	16	511310	CAP; VINYL 1/4"-5/16" BLACK	2	EA
	17	512796	WASHER; NYLON, #10 SCREW	8	EA
*	18	511410	EZ DAM TRAY	1	EA
*	19	513590	EZ DAM COVER	1	EA
	20	509809	SEALANT; POLYERETHANE, GRAY	1	EA
	21	509267	ADHESIVE; INSTANT	1	EA
			* EZD-600-52		
	5	511743	EZD: PANEL STRUCTURE 54"	1	EA
	18	511838	EZ DAM, TRAY, LARGE	1	EA
	19	513589	EZ DAM, COVER, LARGE	1	EA

PS Flood Barriers™
Solutions That Hold Water

PS DOORS

PS Flood Barriers
1150 S. 48th Street
Grand Forks, ND 58201
877.446.1519
psfloodbarriers.com

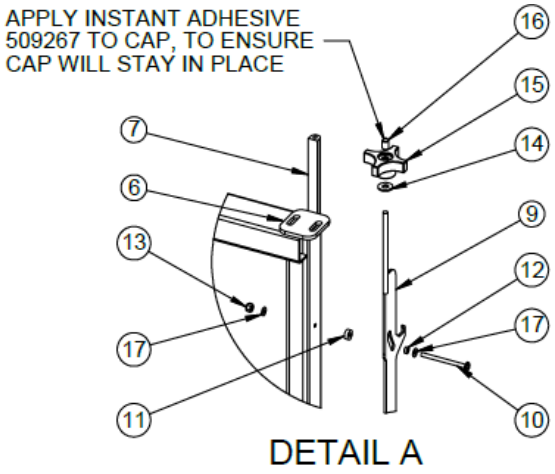

DETAIL A

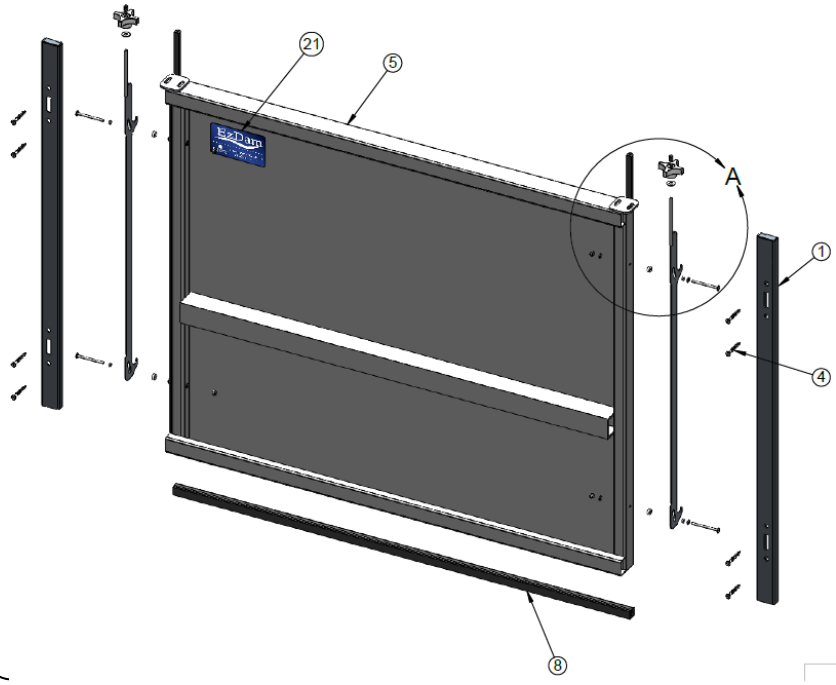

© PS DOORS 2017. All Rights Reserved.

INSPECTION & MAINTENANCE LOG

CRITICAL **Periodic Inspection and Maintenance Required.**

Date Purchased: _____

Product: _____

Model Number: _____

Door Identifier / Number: _____

Serial Number: _____

Location: _____

DATE INSPECTED	INSPECTED BY *(Print & Sign)*	INSPECTION ITEMS NOTED	CORRECTIVE ACTION	CORRECTED BY *(Print & Sign)*

© PS DOORS 2017. All Rights Reserved.